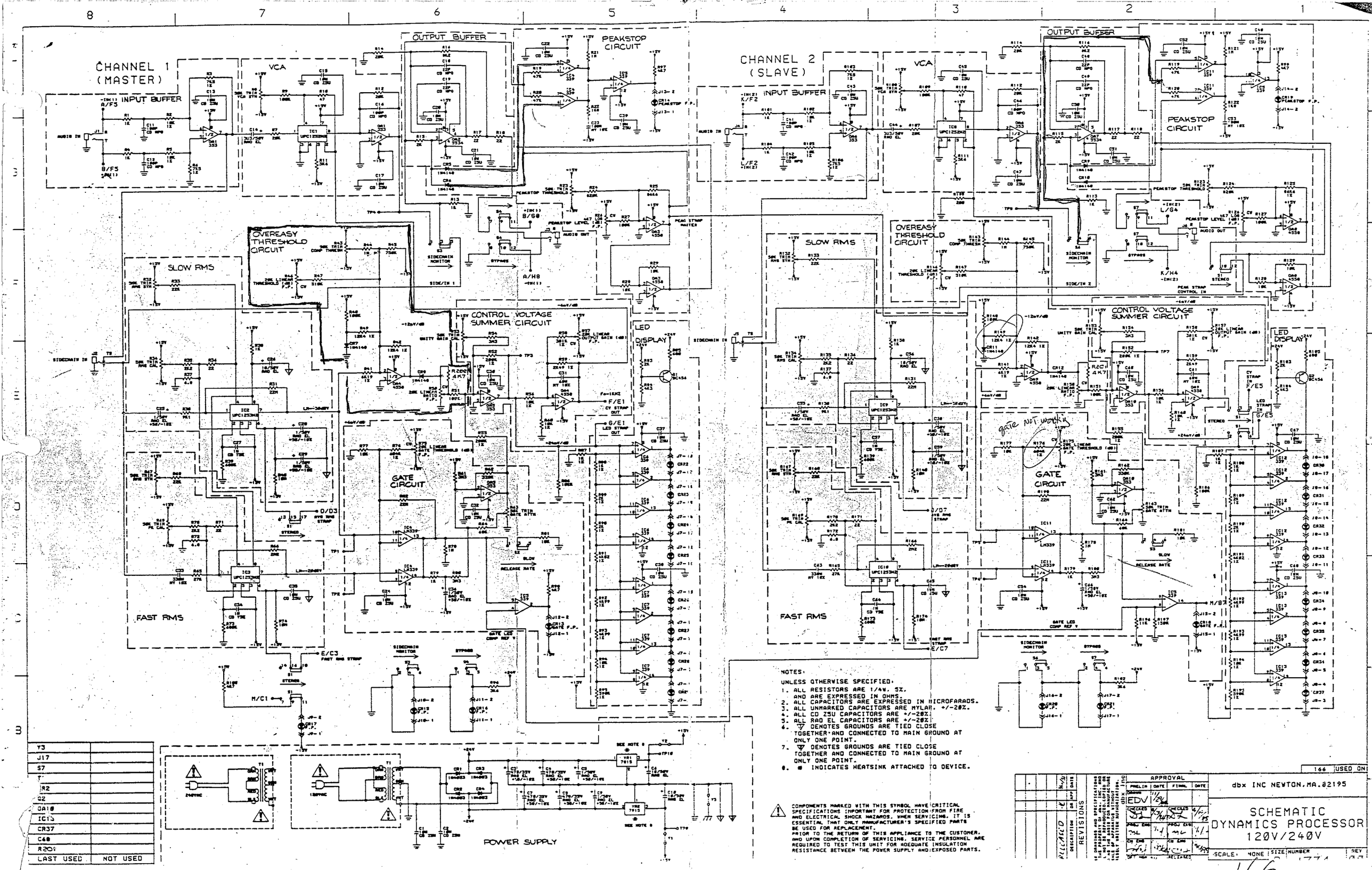

NOTES:

UNLESS OTHERWISE SPECIFIED:

1. ALL RESISTORS ARE 1/4W, 5%, AND ARE EXPRESSED IN OHMS.
2. ALL CAPACITORS ARE EXPRESSED IN MICROFARADS.
3. ALL UNMARKED CAPACITORS ARE MYLAR, +/-20%.
4. ALL CD 25U CAPACITORS ARE +/-20%.
5. ALL RAD EL CAPACITORS ARE +/-20%.
6. ▽ DENOTES GROUNDS ARE TIED CLOSE TOGETHER AND CONNECTED TO MAIN GROUND AT ONLY ONE POINT.
7. ▽ DENOTES GROUNDS ARE TIED CLOSE TOGETHER AND CONNECTED TO MAIN GROUND AT ONLY ONE POINT.
8. ✱ INDICATES HEATSINK ATTACHED TO DEVICE.

⚠ COMPONENTS MARKED WITH THIS SYMBOL HAVE CRITICAL SPECIFICATIONS IMPORTANT FOR PROTECTION FROM FIRE AND ELECTRICAL SHOCK HAZARDS. WHEN SERVICING, IT IS ESSENTIAL THAT ONLY MANUFACTURER'S SPECIFIED PARTS BE USED FOR REPLACEMENT.
PRIOR TO THE RETURN OF THIS APPLIANCE TO THE CUSTOMER, AND UPON COMPLETION OF SERVICING, SERVICE PERSONNEL ARE REQUIRED TO TEST THIS UNIT FOR ADEQUATE INSULATION RESISTANCE BETWEEN THE POWER SUPPLY AND EXPOSED PARTS.

Y3	
J17	
S7	
T	
R2	
Q2	
DA10	
IC13	
CR37	
C60	
R201	
LAST USED	NOT USED

REVISIONS			
RELEASED	DESCRIPTION	DR	APP	DATE

APPROVAL

PRELIM	DATE	FINAL	DATE
DRAWN EDV	11/29/		
CHECKED	4/	CHECKED	4/
PROJ ENG		PROJ ENG	
CH ENG		CH ENG	
OPT MGR		RELEASED	

dbx INC NEWTON, MA. 02195

SCHEMATIC
DYNAMICS PROCESSOR
120V/240V

SCALE: NONE | SIZE | NUMBER | REV

166 USED ON

166